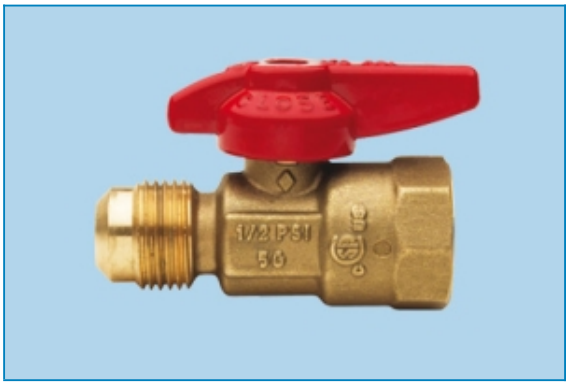

Serie **GAS BALL VALVE**

Articolo **9281**

FIP-FLARE

Gas ball valve unibody design, standard port, female end-flare end.
According to:
- CAN 1-9.1 - US REQUIREMENTS 3-88.
- CGA CR 91-002 - ANSI Z21.15.
- UL 125 "LP GAS" - UL 842 - SUBJECT 258.
- Blow out proof stem, chrome plated brass ball.
- P.T.F.E. seats.
- 100% electronically tested in the open and closed position at 80 psi.

MEETS THE DESIGN CRITERIA OF MSS_SP_110

ONE PIECE BODY

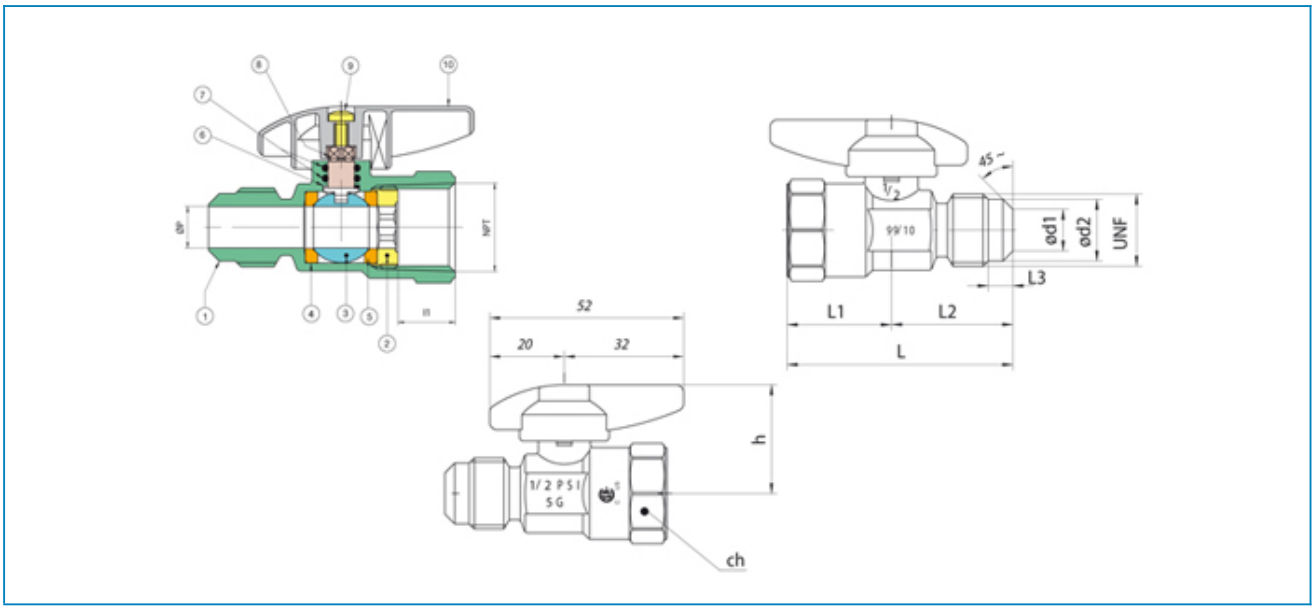

N Pos	PART NAME	MATERIAL	N PCS
1	BODY	BRASS CW 617N UNI EN 12165	1
2	RATAINING NUT	BRASS CW 614N UNI EN 12164	1
3	BALL	BRASS CW 614N UNI EN 12164	1
4	BALL SEAT	P.T.F.E	1
5	BALL SEAT	P.T.F.E	1
6	THRUST WASHER	P.T.F.E	1
7	O-RING	NBR	2
8	STEM	BRASS CW 614N UNI EN 12164	1
9	SCREW	Steel 6/S	1
10	HANDLE	ZAMA G Zn AI4 UNI 3717	1

SIZE	UNF	NPT	ØP	I1	L	L1	L2	L3	Ød1	Ød2	R	CH	h	Lbs
3/8" FIP X 3/8" FLARE	5/8"X18	3/8"X18	0.27	0.40	1.93	0.85	1.08	0.21	0.31	0.53	2.05	0.78	1.06	0.20
1/2" FIP X 3/8" FLARE	5/8"X18	1/2"X14	0.27	0.54	2.24	1.08	1.16	0.21	0.31	0.53	2.05	0.98	1.14	0.28
1/2" FIP X 1/2" FLARE	3/4"X16	1/2"X14	0.39	0.56	2.34	1.08	1.26	0.25	0.43	0.64	2.05	0.98	1.14	0.26